ABSOLUTE ENCODER WITH FIELD BUS **963D**	Compact absolute encoder for industrial ambients. DeviceNet interface. Standard 'size 25' metallic housing with square flange. High resolution and very good quality/price ratio.	Absolute with field bus page: 09.963D 1/2 data sheet IB 054 E00

Measures without tolerance acc. to UNI ISO 2768-mk

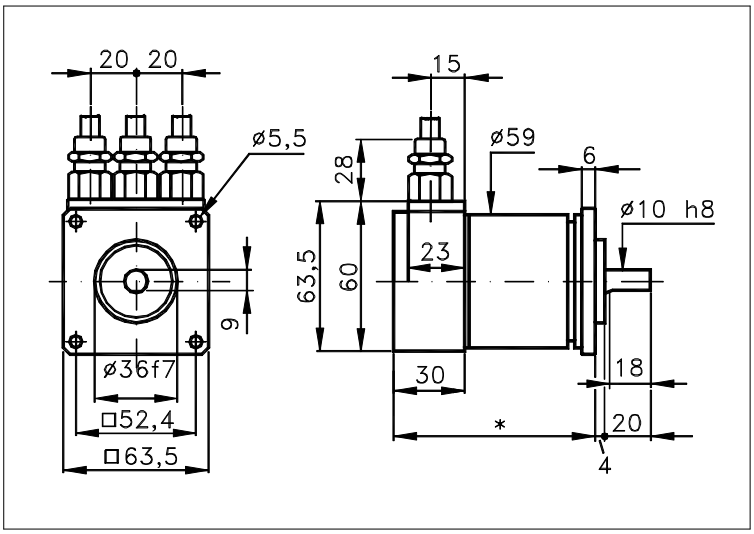

* 82 Singleturn, 92 Multiturn

TECHNICAL FEATURES AND POSSIBLE CONFIGURATIONS

- **Outout codes**.....: Binary
- **Max resolut**.....: 16 bit/1 rev.
  : 30 bit/16384 rev.
- **Pulses/rev**.....: (12) 4096, (13) 8192,
  (14) 16384,(15) 32768,
  (16) 65536.
- **No. of rev**.....: 1, 4096, 16384.
  :
- **Power supply Vcc**.....: 10÷30 VDC
- **Max consumption**.....: 2,5 Watt
- **Light source**.....: LED with >= 100000 h life
- **Optical sensors**.....: IR photodiodes array
- **Step frequency LSB**....: 800 kHz
- **Operating temperature**.: -40 ÷ +85 °C
- **Storage temperature**...: -40 ÷ +85 °C
- **Humidity**.....: 98% (without liquid state)
- **Bus connection**.....: CAN transceiver (ISO11898)
- **Status indic. with 2 LEDs**
- **Accuracy of divisions**.: ±½ LSB(<13bit),±2 LSB(13÷16bit)
- **Output interface**.....: (D2) DeviceNet

- **Connections** : For the codes and the descriptions of connectors see 'ORDERING CODE' on page 2.
- **Housing**.....: Aluminium (*)
- **Weight**.....: singlet.550g ,multit. 600 g
- **Shaft**.....: Stainless steel
- **Max radial/axial load**.: 40/110 N
- **IP output side**.....: see 'CONNECTIONS' on page 2
- **IP shaft side**.....: std.64 | sealed 66
- **Contin. max RPM...(**)**: 6000 | 3000
- **Starting torque..gcm.**: 50 | 90
- **Impact resistance**.....: 30 G (11 ms)
- **Vibration resistance**..: 10 G (10 ÷ 1000 Hz)
- **Ball bearings life**....: >10^5 h @ 1000 rev./m
- **SMD technology**
- **Polarity inversion protect.**
- **Over voltage peak protect.**
- **Disc made of unbreakable and durable plastic.**
- **EMC certific. according to EN 61000-6-2,EN 61000-6-4**
- **Programmable transmis. rate**

(*) Custom options.
(**) Intermittent max RPM + 30% of continuous max RPM.

POSSIBLE OPTIONS

CODE	DESCRIPTION	CODE	DESCRIPTION	CODE	DESCRIPTION
Q	All stainl. steel	W	Sealed ball bear.	X	Customer options

elcis

ELCIS s.r.l. Via Rosa Luxembourg 12/14 10093 COLLEGNO (TO) ITALY
Phone: +39 011 715577/78 r.a.
MAIL: ELCIS s.r.l. P.O.Box 90 10093 COLLEGNO (TO) ITALY

* http://www.elcis.com
* e-mail: info@elcis.com
* Fax: +39 011 712613

INTERFACE

» (D2) DeviceNet

Programmable parameters: Direction of rotation (complement); Resolution per revolution; Total resolution; Preset value; Transmission mode: Polled mode, cyclic mode or cos mode.

»

»

»

CONNECTIONS

» Internal/external views of the connection cap 3PG with 2 LEDs

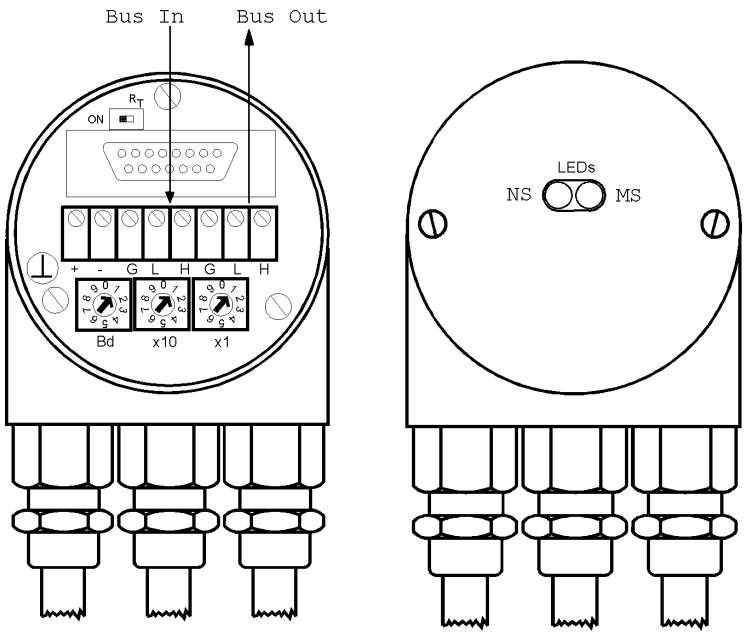

ORDERING INFORMATION

(00)	1(Singlet.)	(10)	Ø 10 (standard)	(Q)	All stainl. steel	(3PG)	Connection cap	IP65
(12)	4096	( )		(X)	Customer options	(3PG-VA)	Stainl. steel conn. cap	IP65
(14)	16384	( )		(W)	Sealed ball bear.	(2M20)	Conn. cap with 2 cables	IP65
		( )		( )		(1BW)	5 pin round conn.	IP65
		( )		(0)	Standard	( )		
		( )				( )		
		( )				( )		
						( )		
						( )		

MODEL	STEP PER REVOL.		No. OF REVOL.		POSSIBLE SHAFT Ø		CODE		INTERFACE		OPTIONS		CONNECTION
963D	12	/	12	/	10	/	B	/	D2	/	0	/	3PG

(D2) DeviceNet

Binary (12) 4096, (13) 8192, (14) 16384, (15) 32768, (16) 65536.

( ) (B) Binary ( ) ( )

Product manufactured according to UNI EN ISO 9001:2000, supplied with CHECKING and CONFORMITY declaration with CE mark and with TWO (2) YEARS WARRANTY starting from delivery date.

COPYRIGHT by ELCIS - Collegno (TO)

elcis
ELCIS s.r.l. Via Rosa Luxembourg 12/14 10093 COLLEGNO (TO) ITALY
Phone: +39 011 715577/78 r.a.
MAIL: ELCIS s.r.l. P.O.Box 90 10093 COLLEGNO (TO) ITALY
* http://www.elcis.com
* e-mail: info@elcis.com
* Fax: +39 011 712613